Technology offers of CEA Cadarache (know how, expertises, patents, softwares, plateforms)



CONTROL CIRCUIT WITH VALVE INCLUDING EXPANSION TANK

Technology presentation

Who ? **All the manufacturers or operators of valves with** a need to simply regulating a liquid flow in reversible flow circuit and simultaneously maintain the pressurization level of the circuit to avoid cavitation in pumps.

What ? This invention may be used with any kind of liquids (e.g. water, charged liquid, metal liquid, milk, petrol…) and **an operating temperature of liquid which may exceeded 350° C.**

Where ? This solution may be use **in a reversible (or not) control circuit** with curved or straight valve structures. It can be installed in infrastructures such as : **Desalination plant, water or wastewater treatment plant, chemical plant, nuclear power plant**,….

How ? **By using a valve comprising an expansion tank with full flow passage.**

Why ? **Adjust the pressure loss in a circuit while maintaining sufficient pressure** at the inlet of the pump to avoid cavitation of the latter.

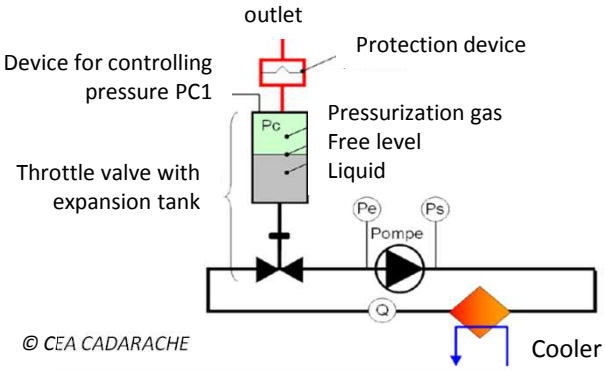

© CEA CADARACHE

Scope of this invention covers :

- *A system to regulate a liquid flow in reversible flow circuit and simultaneously maintain the pressurization level of the circuit to avoid cavitation in pumps*
- *Valve with a spherical or cylindrical obturator.*

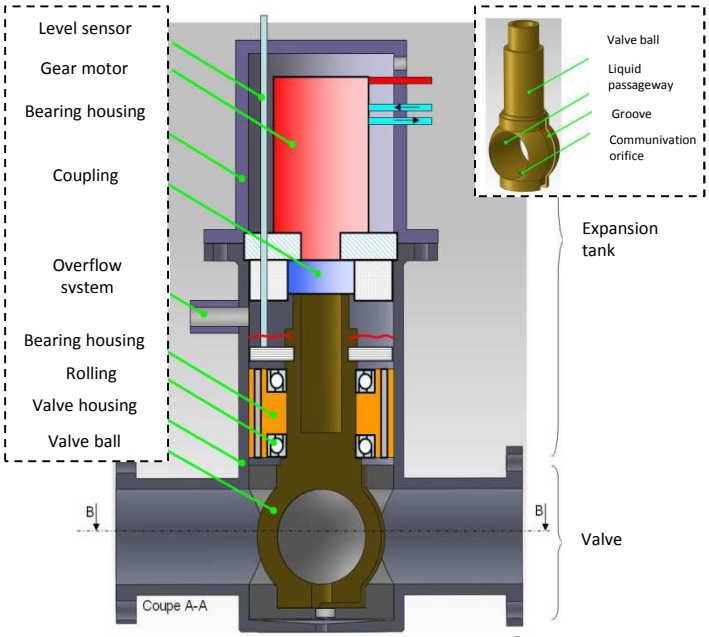

© CEA CADARACHE

In open valve position, **the opening section of obturator is identical to circuit implantation (thus pressure loss is equivalent)**. A groove and a communication orifice (fabricated directly in the obturator) ensures continuous link between circuit and expansion tank. **There is no risk of pump cavitation.** In close valve position, the obturator does not let liquid flow in the circuit **nevertheless there is still a link between the valve and expansion tank.** This new concept limits the system to one control action of the valve opening without any questions of isolation management of one or several expansion tanks.

Contacts : Jean-Pierre TERRAZ - Chargé de valorisation industrielle CEA Cadarache DEN / jean-pierre.terraz@cea.fr, tél. : 04.42.25.72.77
Sophie FONQUERNIE - Responsable P.I. CEA Cadarache DEN / sophie.fonquernie@cea.fr, Tél. : 04.42.25.66.76
Frédéric REY - Expert CEA / frederic.rey@cea.fr, tél. : 04.42.25.34.95

Readiness level

The invention has been the subject of validity calculations to confirm feasibility and ability of the concept (e.g. : finite element calculation of concept's mechanical strength and stiffness). Its technology Readiness Level TRL : 2-3. Technology concept and/or application formulated

Patents

Invention is protected by two French patent applications filed (FR1355025 patent application and FR1355026 patent application filed in 2013) and two international patents filed in 2013.

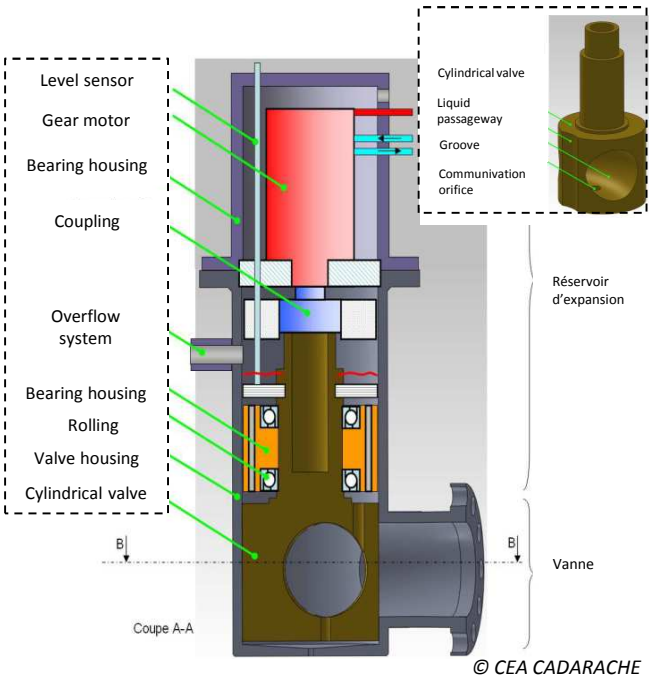

© CEA CADARACHE

Benefits

- **Efficiency** (no pressure loss in open valve position and pressurization of the circuit is identical regardless of the obturator position)
- **Reliability and Safety improvement** (This solution reduces the error risks of control system and the particular structure of cylindrical valve's obturator limit the formation of jet to the arrival expansion tank)
- **Valve operating range** (up to a flow rate of 10 000 m3.h-1 at pressures up to 100 bar)
- **Cost of the solution** (this invention avoids cavitation in the fluid without playing with a set of valves)

Value Offer

A license for using this technology on the entire **French and European market.**

Associated **know-how.**

CEA support to develop product

Contacts : Jean-Pierre TERRAZ - Chargé de valorisation industrielle CEA Cadarache DEN / jean-pierre.terraz@cea.fr, tél. : 04.42.25.72.77
Sophie FONQUERNIE - Responsable P.I. CEA Cadarache DEN / sophie.fonquernie@cea.fr, Tél. : 04.42.25.66.76
Frédéric REY - Expert CEA / frederic.rey@cea.fr, tél. : 04.42.25.34.95

DEN has an expertise and know-how in flow control circuit and specific valve design for sodium allowing us to meet your needs in :

- ✓ **Reversible (or irreversible) liquid control system design.**
- ✓ **Specific valve design (ex. Ball valve, cylindrical valve,…)**
- ✓ **Sodium Technology**
  - Works in hostile environments (heat, noise, small size)
  - Specific instrumentation usable
  - Construction, Installation and operation of sodium installations
- ✓ **Thermal simulation/ CAD**
- ✓ **Implementation of tests under severe conditions**
- ✓ **Consulting activity**

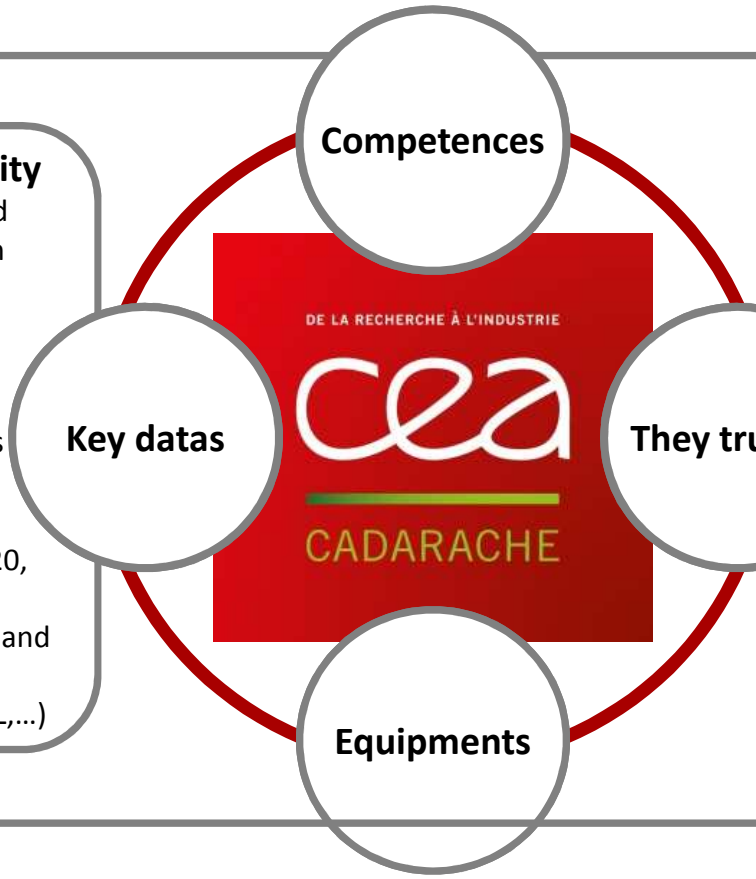

✓ **Human capability**

Laboratory of design and technological innovation
- 12 engineers
- 6 technicians
- (5 specialized in CAD)
- 2 theses in progress

✓ **Means**

Computer aided design software (CATIA R18/R20, SMARTEAM)
Software for calculation and simulation (ANSYS,FLUENT,COMSOL,…)

EDF
AREVA
REG TECHNOLOGY VALVES
VANNES LEFEBVRE MIROUX DUCROUX
DAHER-VANATOME

CEA/DEN offers important means of testing and development to validate technologies of their clients:

- ✓ **Means of test for liquid metal and adapted to the implementation of the sodium (Tmax = 600°C for more than a few liters to de 100 m3)**
  - Instrumentations/ Metrology chain suitable for liquid metal
  - Sodium leak detection system
- ✓ **Test loops (e.g. HERMES,COLENTEC,PLATEAU,….)**
- ✓ **Hydraulic, thermal and vibration instrumentation**

Contacts :
Jean-Pierre TERRAZ - Chargé de valorisation industrielle CEA Cadarache DEN / jean-pierre.terraz@cea.fr, tél. : 04.42.25.72.77
Sophie FONQUERNIE - Responsable P.I. CEA Cadarache DEN / sophie.fonquernie@cea.fr, Tél. : 04.42.25.66.76
Frédéric REY - Expert CEA / frederic.rey@cea.fr, tél. : 04.42.25.34.95

Issues and Markets

Quality assurance, guarantee of performances in order to ***improve the availability and safety of large systems*** such as reactors, are the main issues of this theme.

The solution presented in this document can guarantee these criteria, ***including in the nuclear industry, in the chemical industry or water treatment*** .

Leader in research, development and innovation

The French Alternative Energies and Atomic Energy Commission (CEA) relies on fundamental research and provides a supporting role to the industry.

CEA operates over 10 centers across France. It develops many partnerships with other research organizations, local authorities and universities.

It's recognized as an expert in low-carbon energies, defense and security, information technologies and health technologies fields, CEA is fully integrated into the European Research Area and has a growing international presence.

CEA offers industrial expertise to analyze challenges in the field of control circuit with valve as well as R & D support to adapt the technology presented in this document to specific need.

Contacts :
Jean-Pierre TERRAZ - Chargé de valorisation industrielle CEA Cadarache DEN / jean-pierre.terraz@cea.fr, tél. : 04.42.25.72.77
Sophie FONQUERNIE - Responsable P.I. CEA Cadarache DEN / sophie.fonquernie@cea.fr, Tél. : 04.42.25.66.76
Frédéric REY - Expert CEA / frederic.rey@cea.fr, tél. : 04.42.25.34.95